LOW VOLTAGE MOSFET (P-CHANNEL)

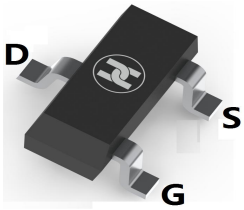

SOT-23

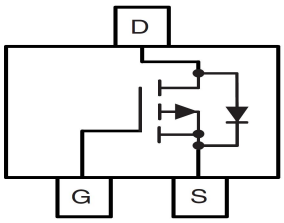

FEATURES

- V_{DS}=-30V,$R_{DS(ON)}$≤115mΩ@V_{GS}=-10V,I_D=-2.6A
- Low on-resistance
- For PWM and Load switch applications
- Surface Mount device

MECHANICAL DATA

- Case: SOT-23
- Case Material: Molded Plastic. UL flammability
- Classification Rating: 94V-0
- Weight: 0.008 grams (approximate)

MAXIMUM RATINGS (T_A = 25°C unless otherwise noted)

Parameter		Symbol	Value	Unit
Drain-source voltage		V_{DS}	-30	V
Gate-source voltage		V_{GS}	±12	V
Continuous drain current	T_A=25°C	I_D	-2.6	A
	T_A=70°C		-2.2	A
Pulsed drain current		I_{DM}	-13	A
Power dissipation	T_A=25°C	P_D	1.4	W
	T_A=70°C		0.9	W
Thermal resistance from Junction to ambient		$R_{\theta JA}$	125	°C/W
Junction temperature		T_J	150	°C
Storage temperature		T_{STG}	-55~+150	°C

ELECTRICAL CHARACTERISTICS (T_A = 25°C unless otherwise specified)

Parameter	Symbol	Min	Typ	Max	Unit	Conditions
Drain-Source breakdown voltage	$V_{(BR)DSS}$*	-30			V	V_{GS}=0V, I_D=-250μA
Zero gate voltage drain current	I_{DSS}*			-1	uA	V_{DS}=-30V, V_{GS}=0V
Gate-body leakage current	I_{GSS}*			±100	nA	V_{DS}=0V, V_{GS}=±12V
Gate-threshold voltage	$V_{GS(th)}$*	-0.6	-1	-1.4	V	V_{DS}=V_{GS}, I_D=-250μA
On state drain current	$I_{D(ON)}$*	-13			A	V_{GS}=-10V, V_{DS}=-5V
Drain-source on-resistance	$R_{DS(ON*)}$		88	115	mΩ	V_{GS}=-10V, I_D=-2.6A
			103	150	mΩ	V_{GS}=-4.5V, I_D=-2A
			139	200	mΩ	V_{GS}=-2.5V, I_D=-1A
Forward transconductance	g_{FS}		8		S	V_{DS}=-5V, I_D=-2.6A
Gate resistance	R_g	4	8	12	Ω	V_{DS}=0V, V_{GS}=0V, f=1MHz
Input capacitance	C_{iss}		260	315	pF	V_{DS}=-15V, V_{GS}=0V, f=1MHz
Output capacitance	C_{oss}		37		pF	
Reverse transfer capacitance	C_{rss}		20		pF	
Turn-on delay time	$t_{d(on)}$		6		nS	V_{GS}=-10V,V_{DS}=-15V, R_{GEN}=3Ω,R_L=5.76Ω
Turn-on rise time	t_r		3.5		nS	
Turn-off delay time	$t_{d(off)}$		20		nS	
Turn-off fall time	t_f		5		nS	
Total gate charge	Q_g		2.8	3.5	nC	V_{DS}=-15V,V_{GS}=-4.5V,I_D=-2.6A
			5.9	7.2	nC	V_{DS}=-15V,V_{GS}=-10V,I_D=-2.6A
Gate-source charge	Q_{gs}		0.7		nC	
Gate-drain charge	Q_{gd}		1		nC	
Diode forward voltage	V_{SD}		-0.78	-1	V	I_S=-1A, V_{GS}=0V
Diode forward current	I_S			-1.5	A	T_C = 25°C
Body Diode Reverse Recovery Time	t_{rr}		11.5	15	nS	I_F=-2.6A,dI/dt=100A/μs
Body Diode Reverse Recovery Charge	Q_{rr}		4.5		nC	

* Pulse test ; Pulse width ≤300μs, Duty cycle ≤ 0.5% .

LOW VOLTAGE MOSFET (P-CHANNEL)

Typical Characteristics

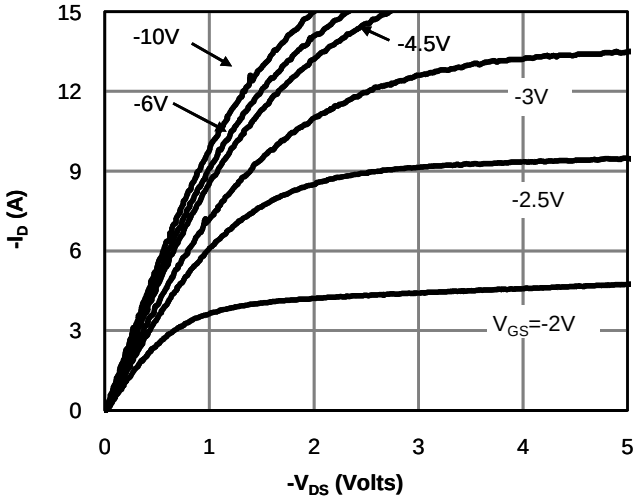

Fig 1: On-Region Characteristics (Note E)

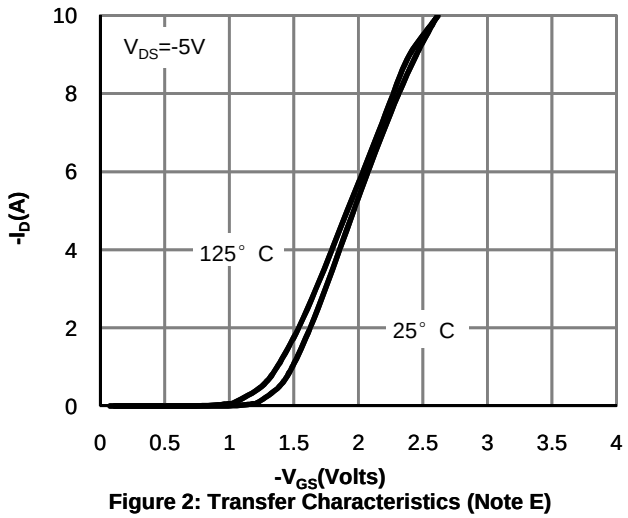

Figure 2: Transfer Characteristics (Note E)

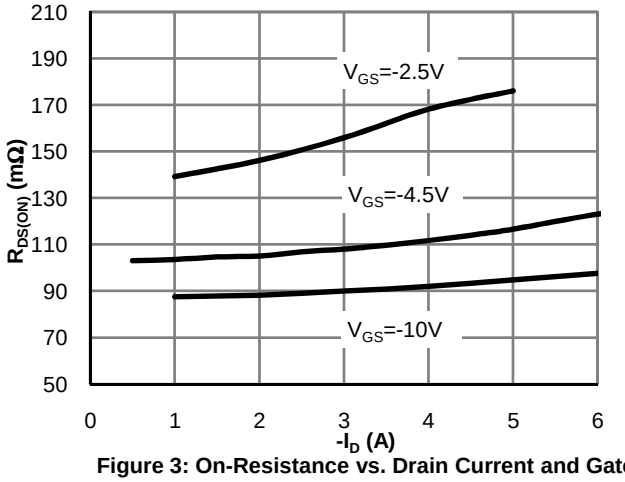

Figure 3: On-Resistance vs. Drain Current and Gate Voltage (Note E)

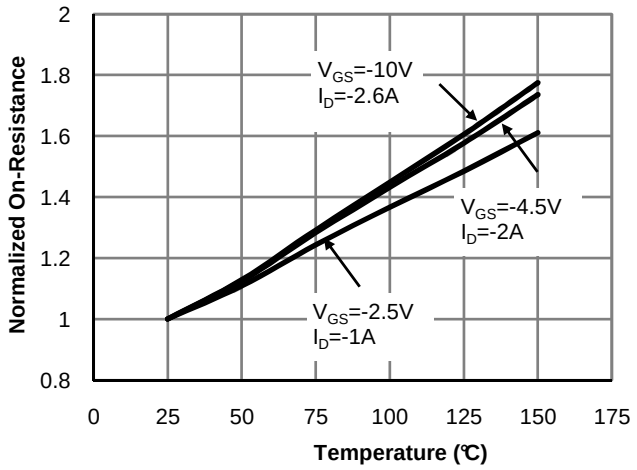

Figure 4: On-Resistance vs. Junction Temperature (Note E)

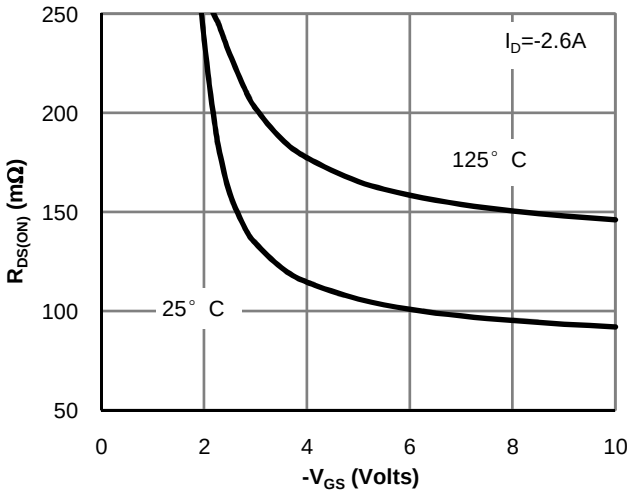

Figure 5: On-Resistance vs. Gate-Source Voltage (Note E)

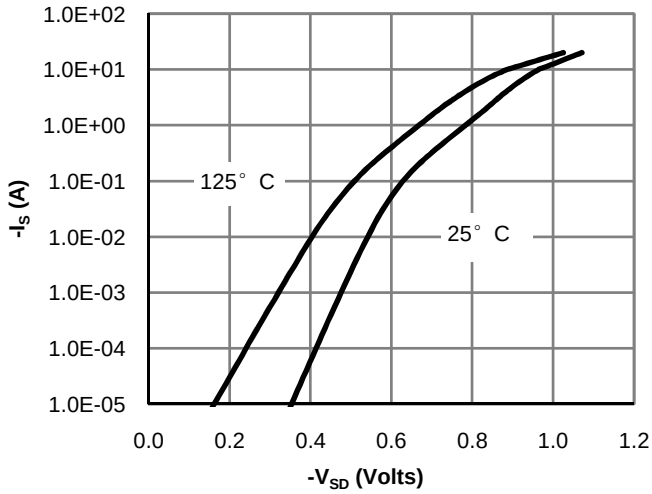

Figure 6: Body-Diode Characteristics (Note E)

LOW VOLTAGE MOSFET (P-CHANNEL)

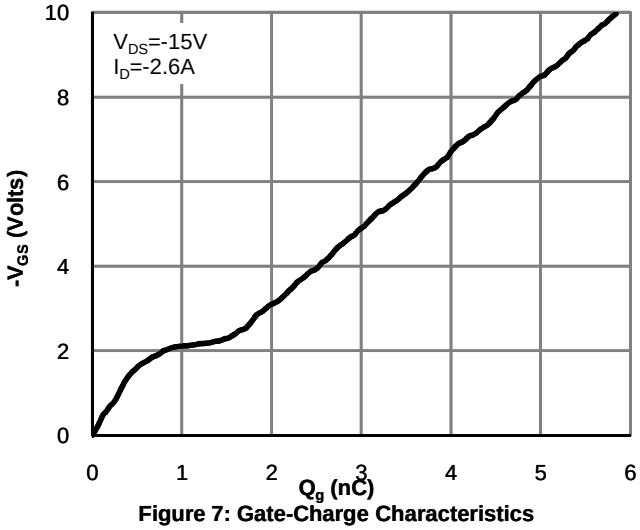

Figure 7: Gate-Charge Characteristics

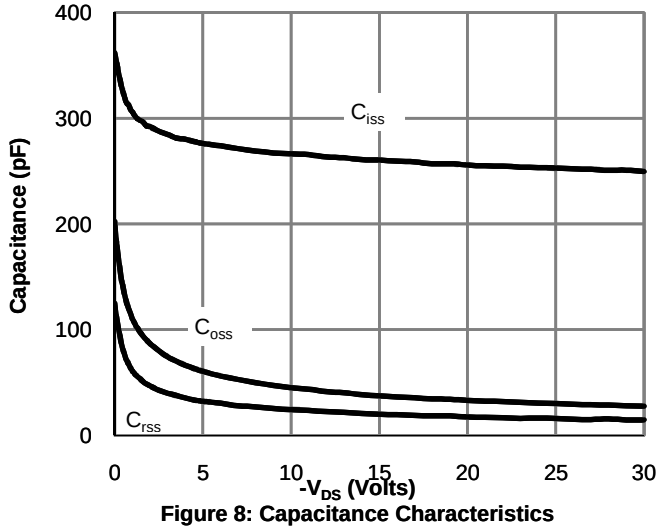

Figure 8: Capacitance Characteristics

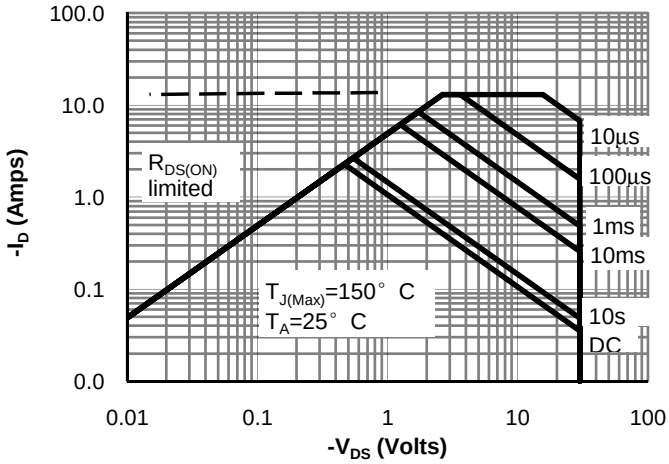

Figure 9: Maximum Forward Biased Safe Operating Area (Note F)

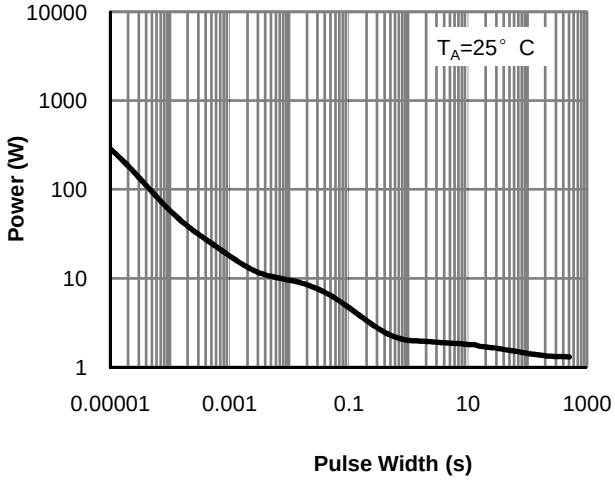

Figure 10: Single Pulse Power Rating Junction-to-Ambient (Note F)

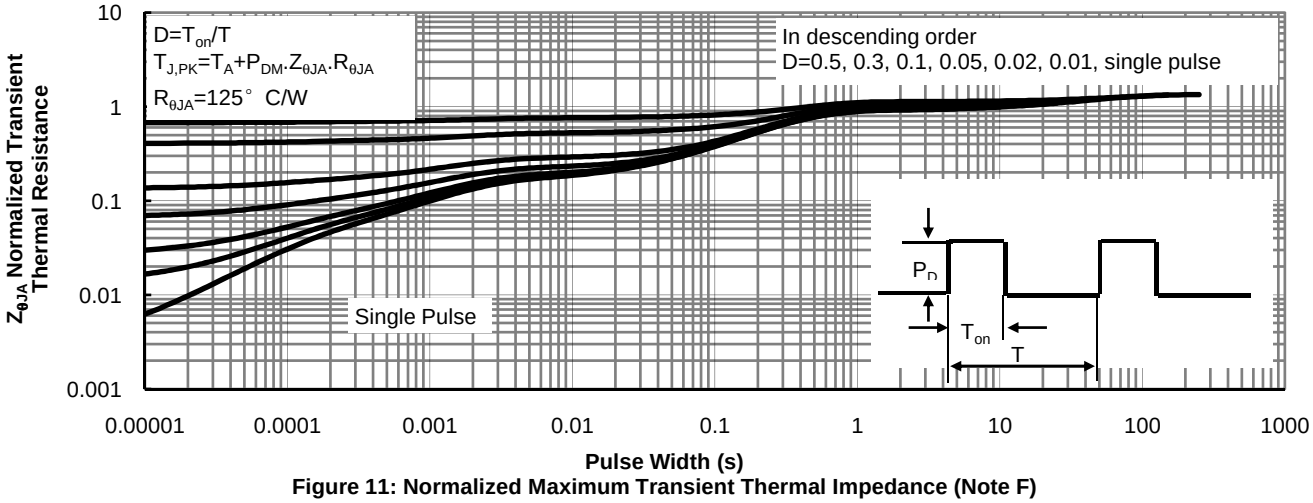

Figure 11: Normalized Maximum Transient Thermal Impedance (Note F)

LOW VOLTAGE MOSFET (P-CHANNEL)

Gate Charge Test Circuit & Waveform

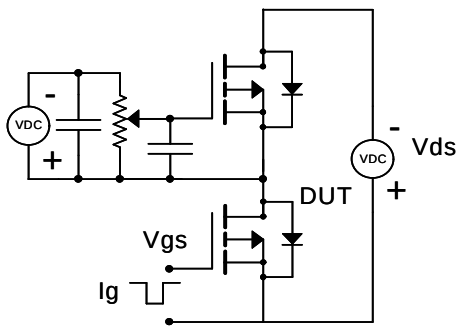

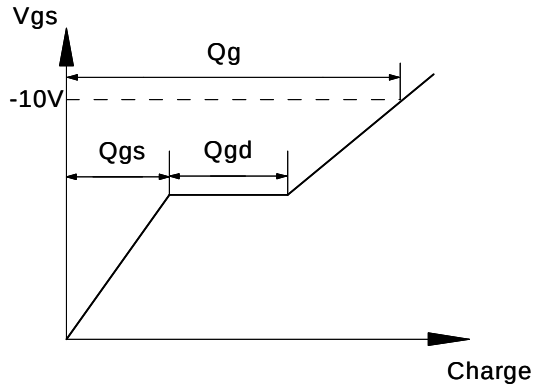

Resistive Switching Test Circuit & Waveforms

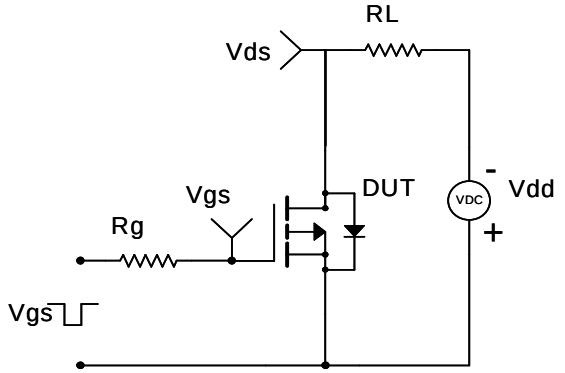

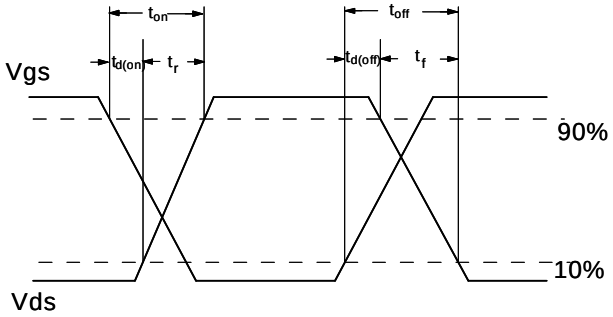

Unclamped Inductive Switching (UIS) Test Circuit & Waveforms

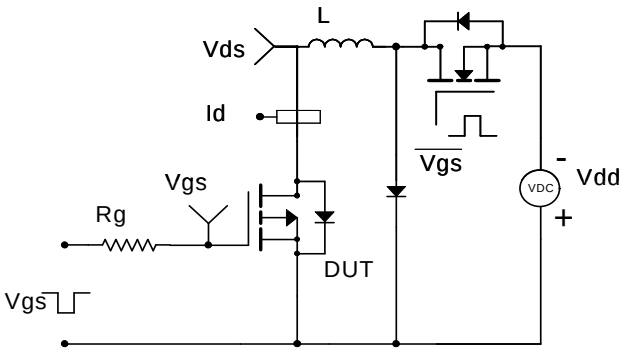

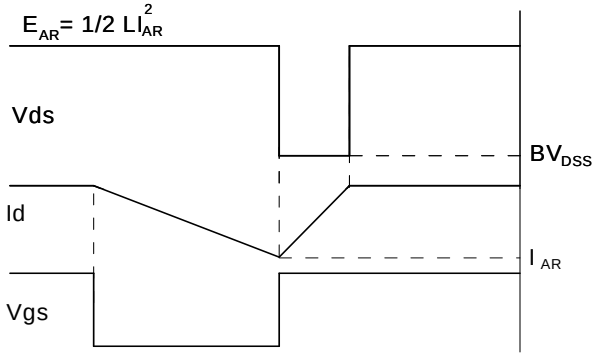

Diode Recovery Test Circuit & Waveforms

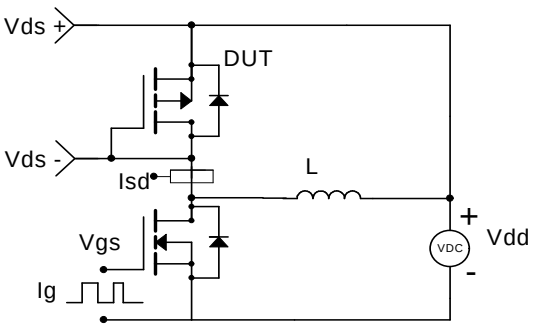

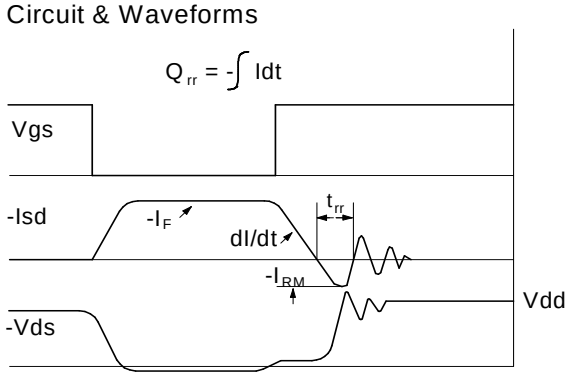

LOW VOLTAGE MOSFET (P-CHANNEL)

SOT-23 Package Outline Dimensions

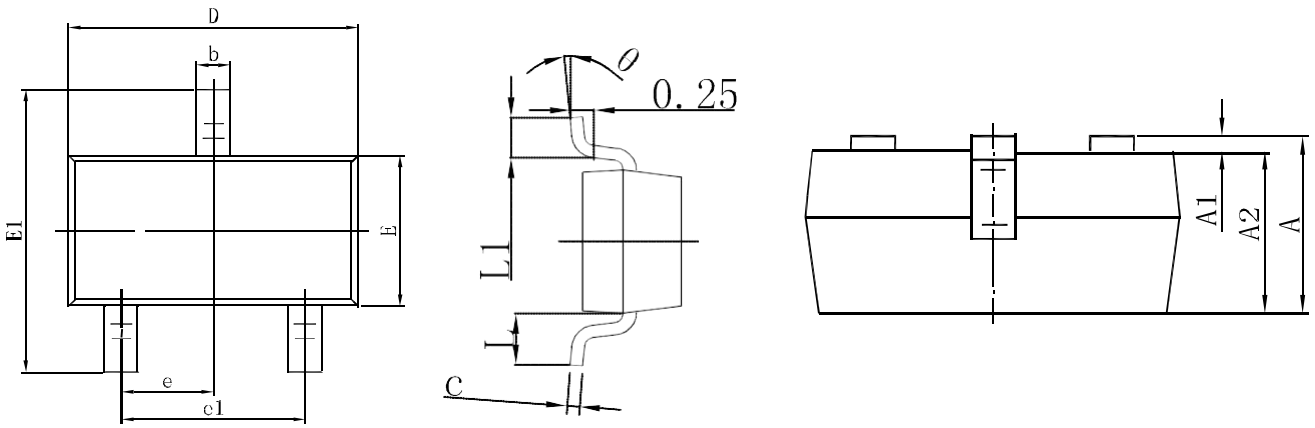

Symbol	Dimensions In Millimeters		Dimensions In Inches	
	Min.	Max.	Min.	Max.
A	0.900	1.150	0.035	0.045
A1	0.000	0.100	0.000	0.004
A2	0.900	1.050	0.035	0.041
b	0.300	0.500	0.012	0.020
c	0.080	0.150	0.003	0.006
D	2.800	3.000	0.110	0.118
E	1.200	1.400	0.047	0.055
E1	2.250	2.550	0.089	0.100
e	0.950 TYP		0.037 TYP	
e1	1.800	2.000	0.071	0.079
L	0.550 REF		0.022 REF	
L1	0.300	0.500	0.012	0.020
θ	0°	8°	0°	8°

SOT-23 Suggested Pad Layout

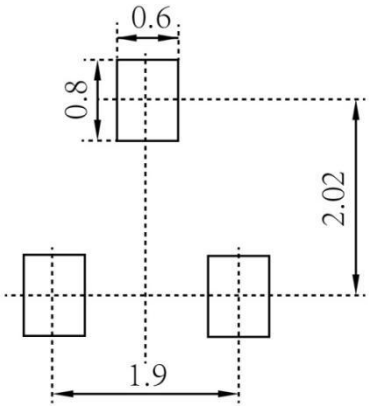

Note:

1.Controlling dimension: in millimeters

2.General tolerance: ±0.05mm

3.The pad layout is for reference purposes only

LOW VOLTAGE MOSFET (P-CHANNEL)

SOT-23 Tape and Reel

SOT-23 Embossed Carrier Tape

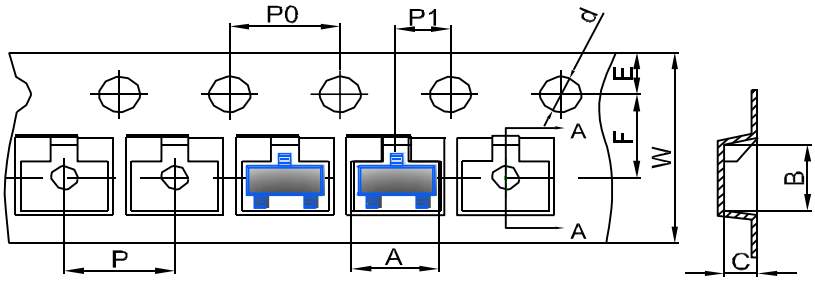

	DIMENSIONS ARE IN MILLIMETER									
TYPE	A	B	C	d	E	F	P0	P	P1	W
SOT-23	3.15	2.77	1.22	Ø1.50	1.75	3.50	4.00	4.00	2.00	8.00
TOLERANCE	±0.1	±0.1	±0.1	±0.1	±0.1	±0.1	±0.1	±0.1	±0.1	±0.1

SOT-23 Tape Leader and Trailer

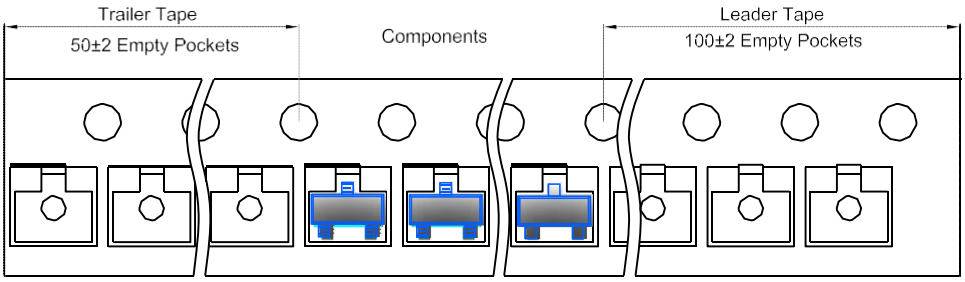

SOT-23 Reel

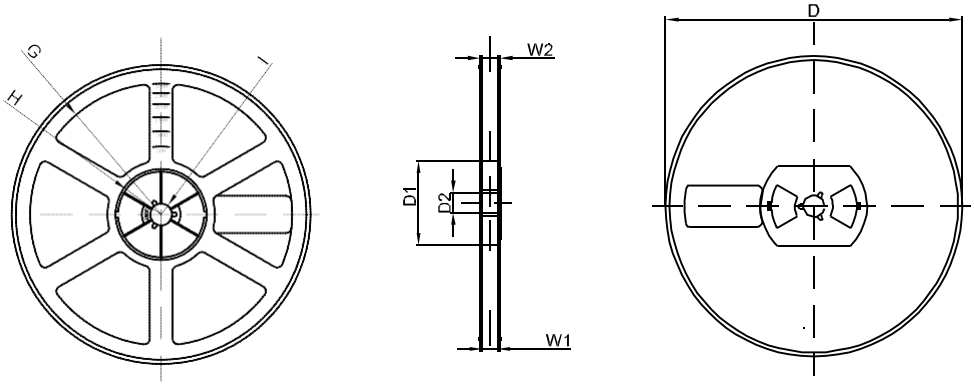

	DIMENSIONS ARE IN MILLIMETER							
REEL OPTION	D	D1	D2	G	H	I	W1	W2
7” DIA	Ø178	54.40	13.00	R78	R25.60	R6.50	9.50	12.30
TOLERANCE	±2	±1	±1	±1	±1	±1	±1	±1