LOW VOLTAGE MOSFET (P-CHANNEL)

FEATURES

- V_{DS}=-20V,$R_{DS(ON)}$≤35mΩ@V_{GS}=-4.5V,I_D=-3A
- Low on-resistance and low gate charge
- For Load switch applications
- Surface Mount device

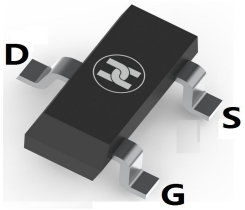

SOT-23

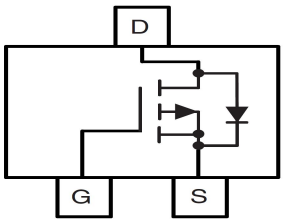

MECHANICAL DATA

- Case: SOT-23
- Case Material: Molded Plastic. UL flammability
- Classification Rating: 94V-0
- Weight: 0.008 grams (approximate)

MAXIMUM RATINGS (T_A = 25°C unless otherwise noted)

Parameter		Symbol	Value	Unit
Drain-source voltage		V_{DS}	-20	V
Gate-source voltage		V_{GS}	±10	V
Continuous drain current	T_A=25°C	I_D	-3.8	A
	T_A=70°C		-2.9	A
Pulsed drain current		I_{DM}	-30	A
Power dissipation	T_A=25°C	P_D	1.5	W
	T_A=70°C		1	W
Thermal resistance from Junction to ambient		$R_{\theta JA}$	100	°C/W
Junction temperature		T_J	150	°C
Storage temperature		T_{STG}	-55~+150	°C

ELECTRICAL CHARACTERISTICS (T_A = 25°C unless otherwise specified)

Parameter	Symbol	Min	Typ	Max	Unit	Conditions
Drain-Source breakdown voltage	$V_{(BR)DSS}$*	-20			V	V_{GS}=0V, I_D=-250μA
Zero gate voltage drain current	I_{DSS}*			-1	μA	V_{DS}=-20V, V_{GS}=0V
Gate-body leakage current	I_{GSS}*			±10	μA	V_{DS}=0V, V_{GS}=±8V
Gate-threshold voltage	$V_{GS(th)}$*	-0.3	-0.7	-1.5	V	V_{DS}=V_{GS}, I_D=-250μA
On state drain current	$I_{D(ON)}$*	-30			A	V_{GS}=-4.5V, V_{DS}=-5V
Drain-source on-resistance	$R_{DS(ON)}$*		28	35	mΩ	V_{GS}=-4.5V, I_D=-3A
			36	55	mΩ	V_{GS}=-2.5V, I_D=-2A
			53	70	mΩ	V_{GS}=-1.8V, I_D=-2A
			68		mΩ	V_{GS}=-1.5V, I_D=-2A
Forward transconductance	g_{FS}		13		S	V_{DS}=-5V, I_D=-3A
Gate resistance	R_g	6	12.2	20	Ω	V_{DS}=0V, V_{GS}=0V, f=1MHz
Input capacitance	C_{iss}	600	770	905	pF	V_{DS}=-10V, V_{GS}=0V, f=1MHz
Output capacitance	C_{oss}	73	85	95	pF	
Reverse transfer capacitance	C_{rss}	62	77	90	pF	
Turn-on delay time	$t_{d(on)}$		13		nS	V_{GS}=-4.5V,V_{DS}=-10V, R_{GEN}=3Ω,R_L=2.5Ω
Turn-on rise time	t_r		9		nS	
Turn-off delay time	$t_{d(off)}$		19		nS	
Turn-off fall time	t_f		29		nS	
Total gate charge	Q_g	7.4	9.3	11	nC	V_{DS}=-10V,V_{GS}=-4.5V,I_D=-3A
Gate-source charge	Q_{gs}	0.8	1	1.2	nC	
Gate-drain charge	Q_{gd}	1.3	2.2	3.1	nC	
Diode forward voltage	V_{SD}		-0.64	-1	V	I_S=-1A, V_{GS}=0V
Diode forward current	I_S			-2	A	
Body Diode Reverse Recovery Time	t_{rr}	20	26	32	nS	I_F=-3A,dI/dt=500A/μs
Body Diode Reverse Recovery Charge	Q_{rr}	40	51	62	nC	

* Pulse test ; Pulse width ≤300μs, Duty cycle ≤ 0.5% .

LOW VOLTAGE MOSFET (P-CHANNEL)

Typical Characteristics

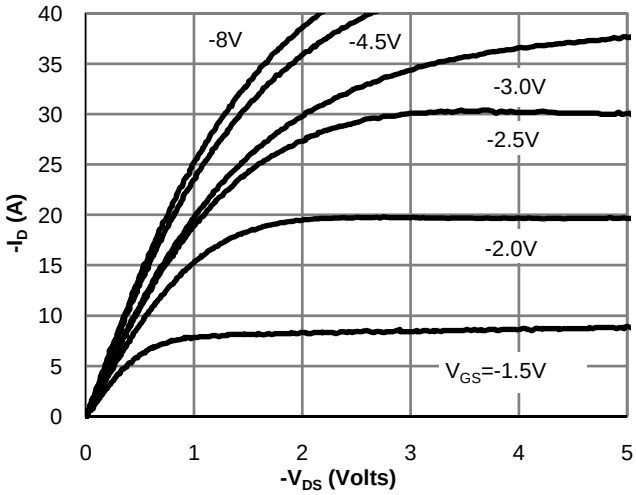

Fig 1: On-Region Characteristics

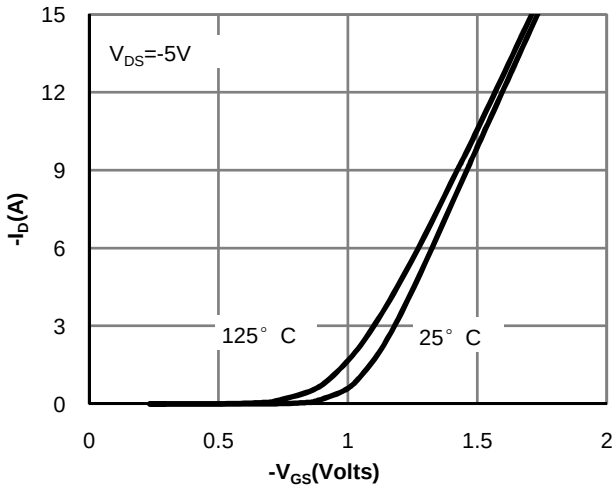

Figure 2: Transfer Characteristics

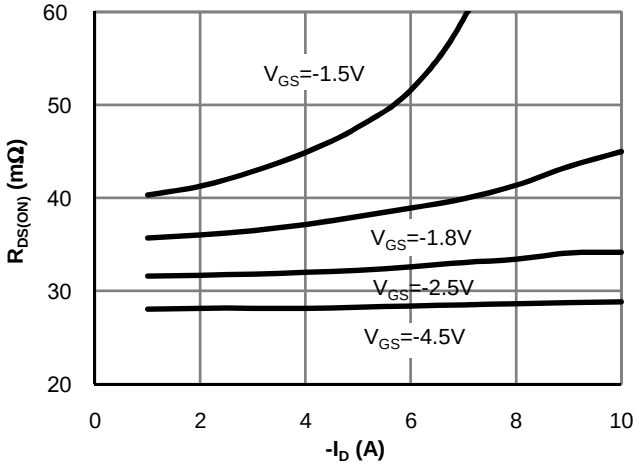

Figure 3: On-Resistance vs. Drain Current and Gate Voltage

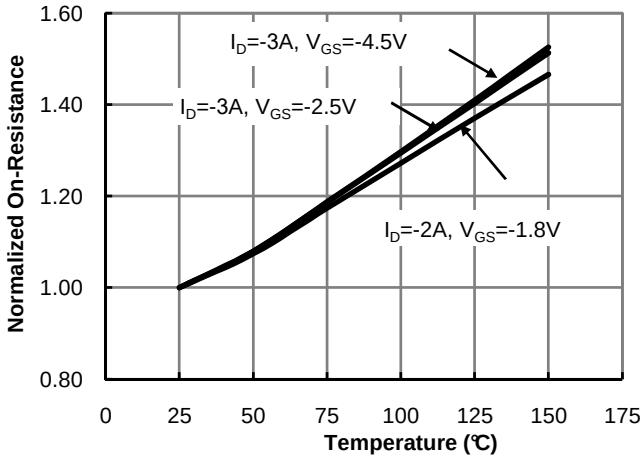

Figure 4: On-Resistance vs. Junction Temperature

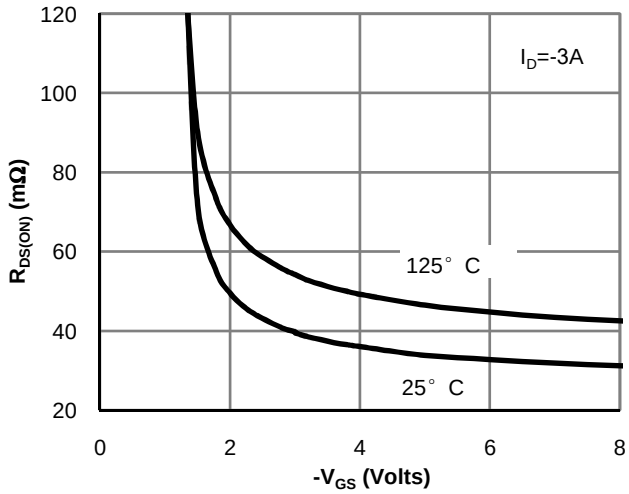

Figure 5: On-Resistance vs. Gate-Source Voltage

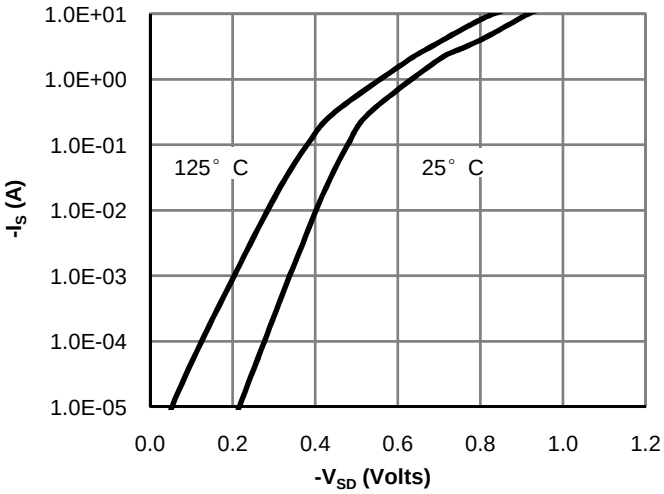

Figure 6: Body-Diode Characteristics

LOW VOLTAGE MOSFET (P-CHANNEL)

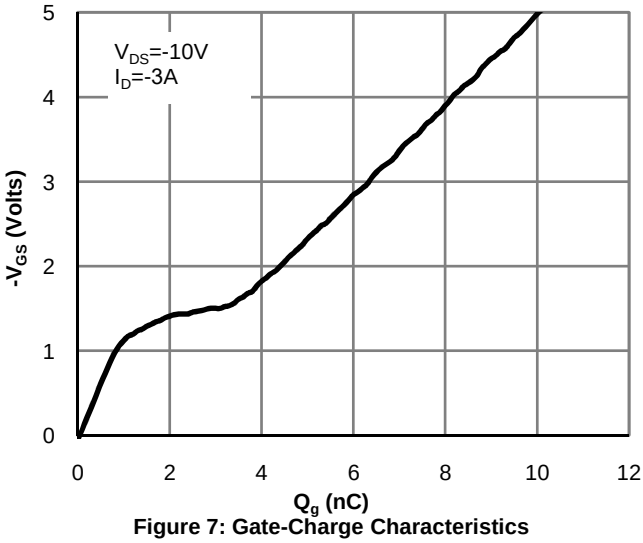

Figure 7: Gate-Charge Characteristics

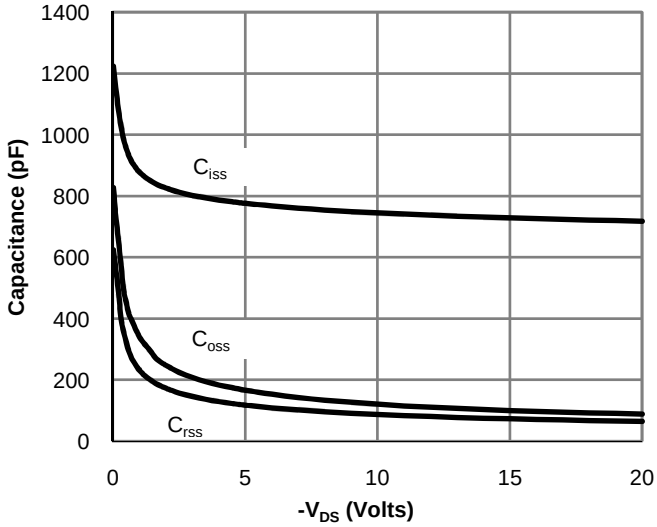

Figure 8: Capacitance Characteristics

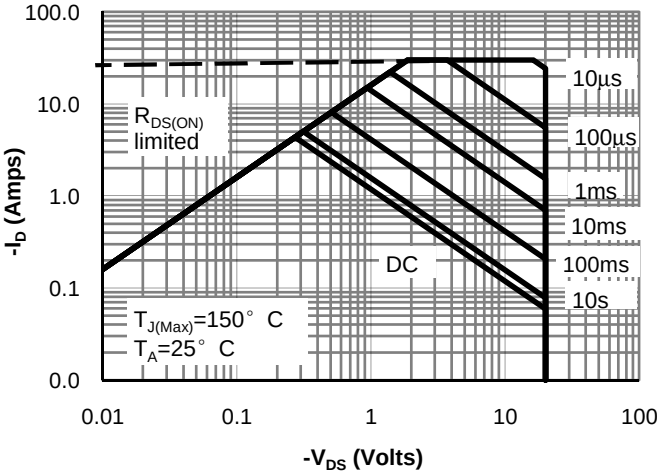

Figure 9: Maximum Forward Biased Safe Operating Area

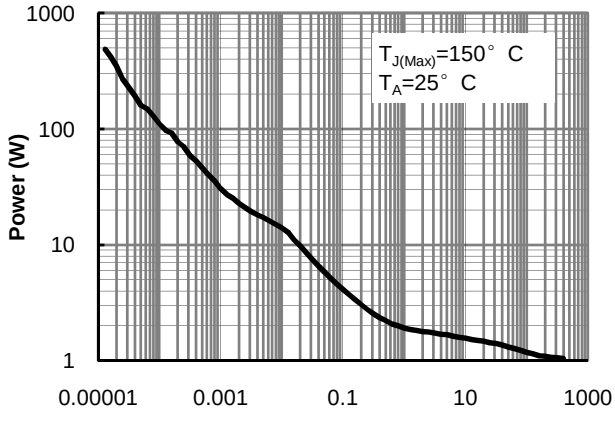

Figure 10: Single Pulse Power Rating Junction-to-Ambient

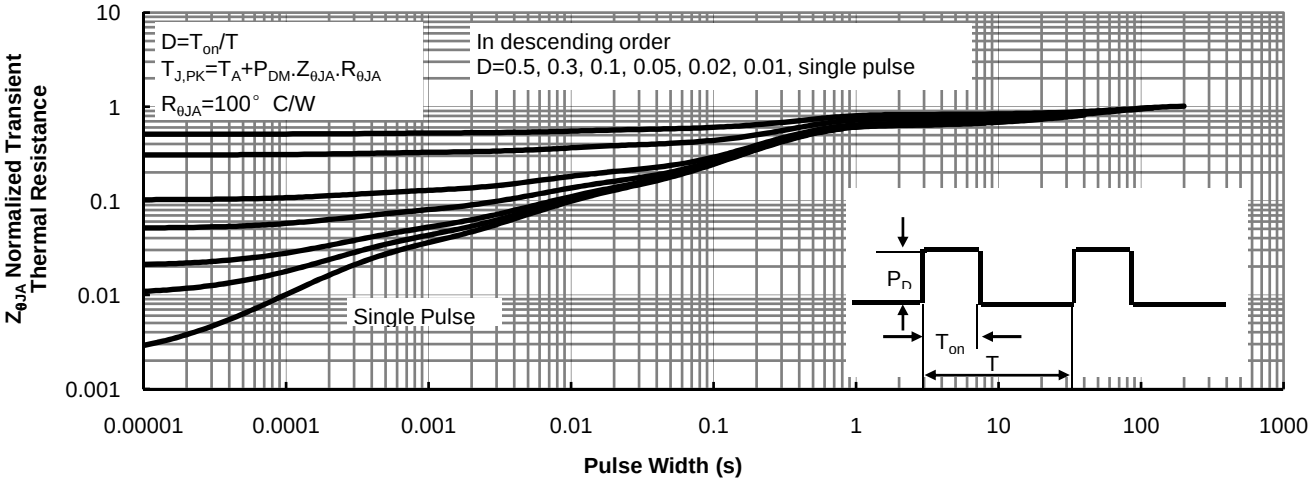

Figure 11: Normalized Maximum Transient Thermal Impedance (Note F)

LOW VOLTAGE MOSFET (P-CHANNEL)

Gate Charge Test Circuit & Waveform

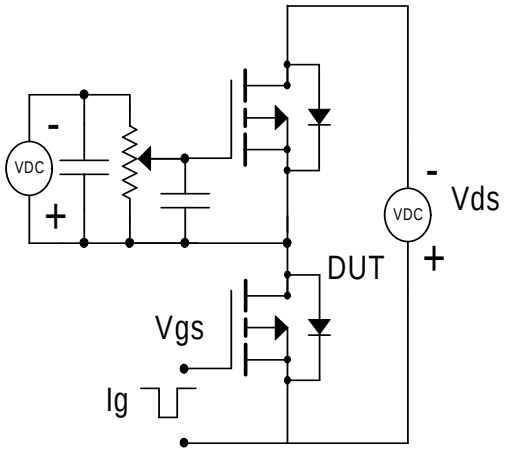

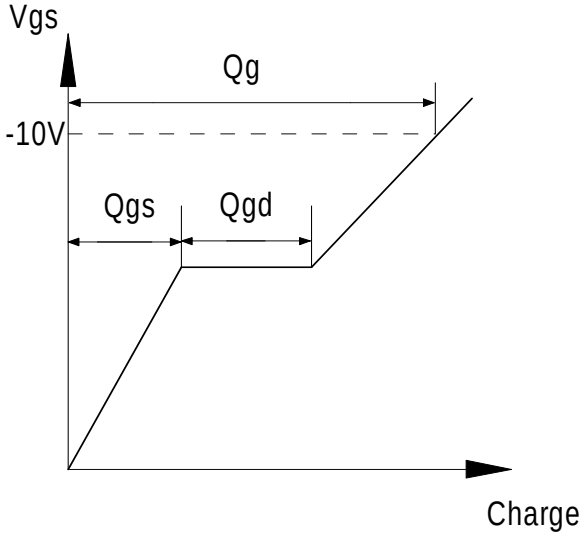

Resistive Switching Test Circuit & Waveforms

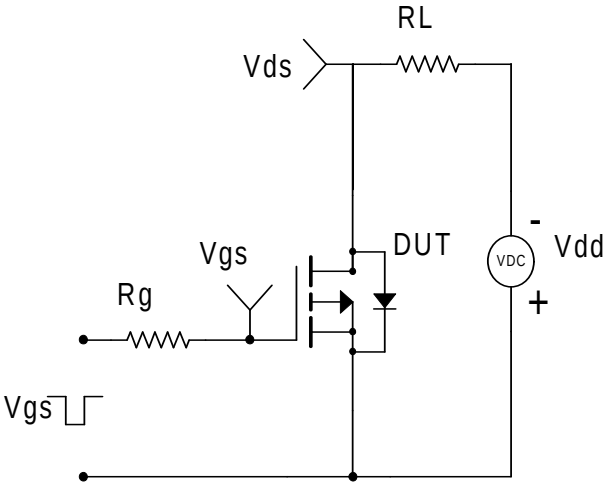

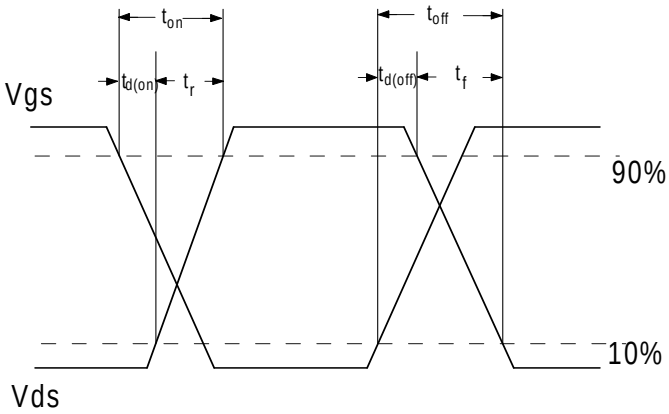

Diode Recovery Test Circuit & Waveforms

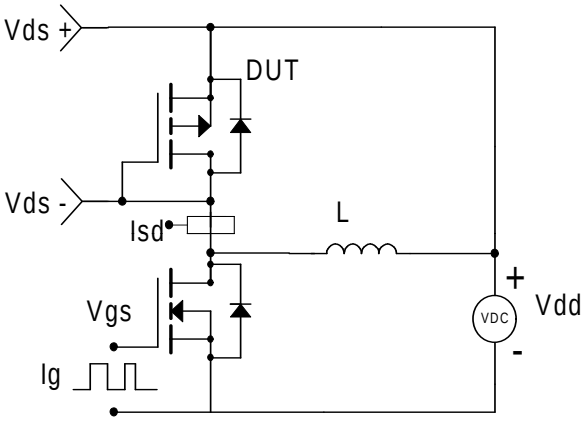

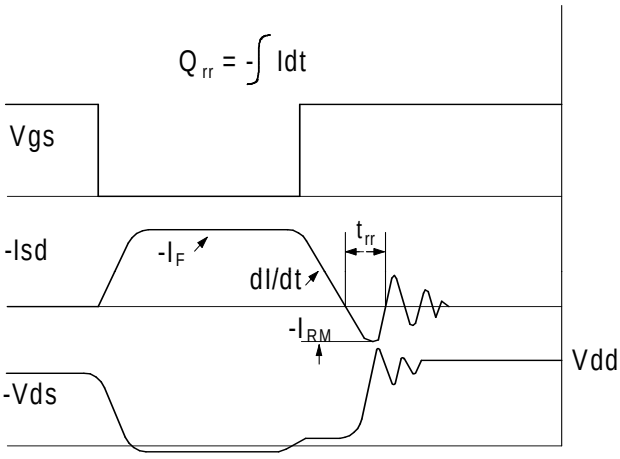

LOW VOLTAGE MOSFET (P-CHANNEL)

SOT-23 Package Outline Dimensions

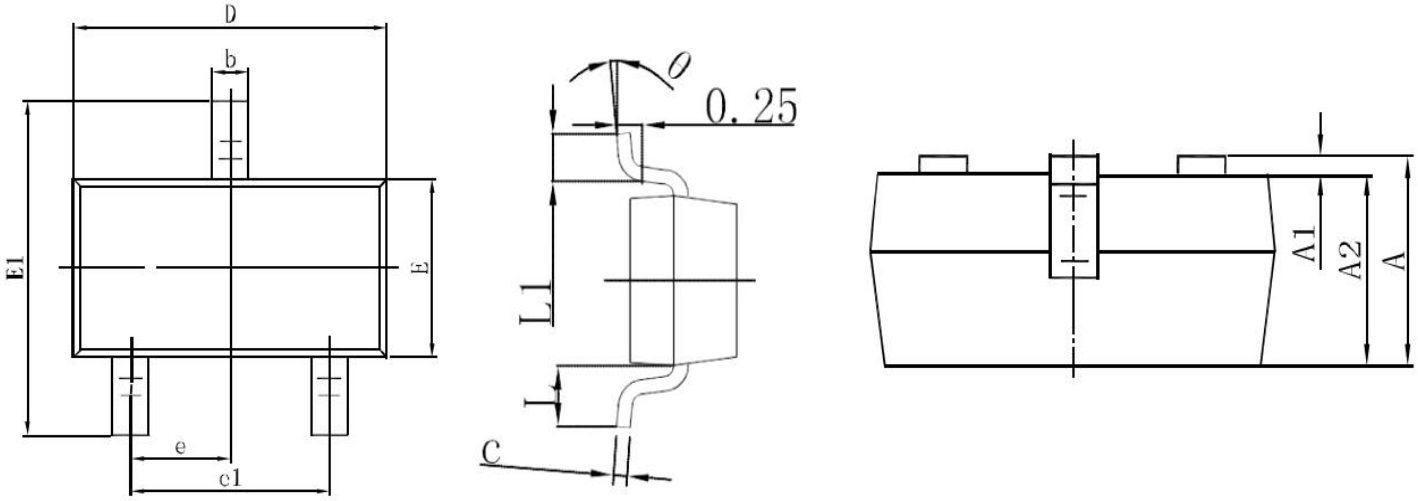

Symbol	Dimensions In Millimeters		Dimensions In Inches	
	Min	Max	Min	Max
A	0.900	1.150	0.354	0.453
A1	0.000	0.100	0.000	0.039
A2	0.900	1.050	0.354	0.413
b	0.300	0.500	0.118	0.197
c	0.080	1.150	0.031	0.453
D	2.900	3.100	1.142	1.220
E	1.200	1.400	0.472	0.551
E1	2.250	2.550	0.886	1.004
e	0.95REF		0.374REF	
e1	1.800	2.000	0.709	0.787
L	0.55REF		0.215REF	
L1	0.300	0.500	0.118	0.197

SOT-23 Suggested Pad Layout

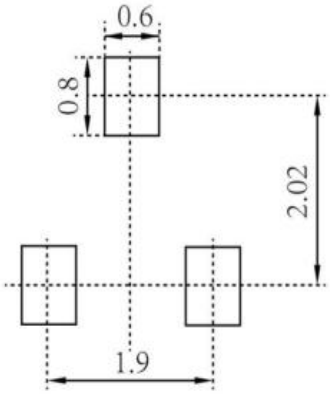

Note:

1. Controlling dimension: in millimeters
2. General tolerance: ±0.05mm
3. The pad layout is for reference purposes only

LOW VOLTAGE MOSFET (P-CHANNEL)

SOT-23 Tape and Reel

SOT-23 Embossed Carrier Tape

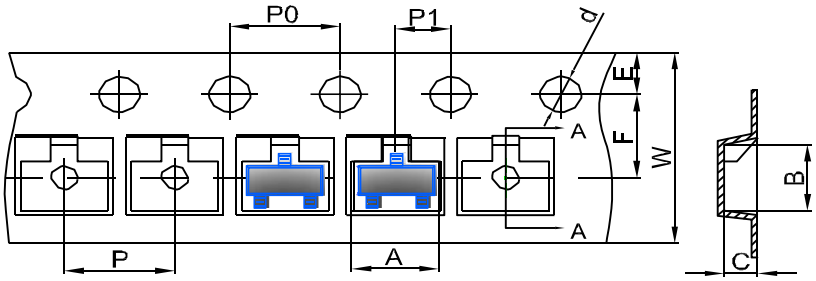

	DIMENSIONS ARE IN MILLIMETER									
TYPE	A	B	C	d	E	F	P0	P	P1	W
SOT-23	3.15	2.77	1.22	Ø1.50	1.75	3.50	4.00	4.00	2.00	8.00
TOLERANCE	±0.1	±0.1	±0.1	±0.1	±0.1	±0.1	±0.1	±0.1	±0.1	±0.1

SOT-23 Tape Leader and Trailer

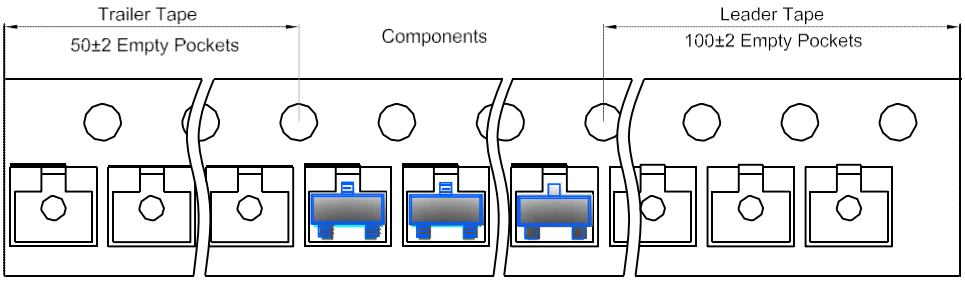

SOT-23 Reel

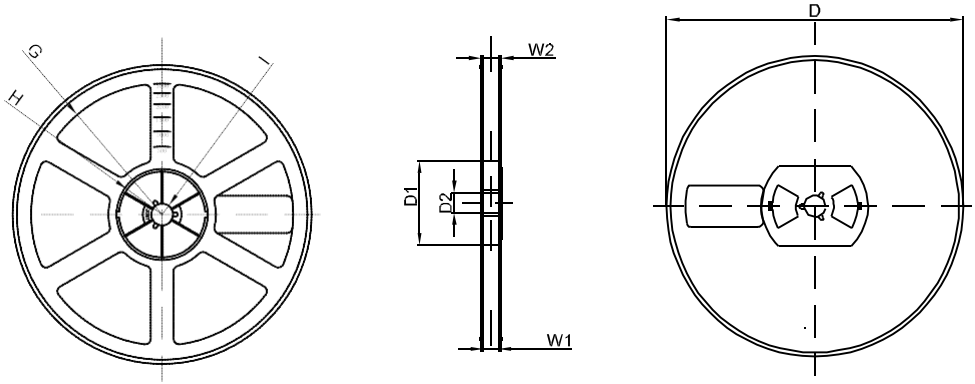

	DIMENSIONS ARE IN MILLIMETER							
REEL OPTION	D	D1	D2	G	H	I	W1	W2
7" DIA	Ø178	54.40	13.00	R78	R25.60	R6.50	9.50	12.30
TOLERANCE	±2	±1	±1	±1	±1	±1	±1	±1